Wilo-ER 1, ER 1-A

D	Einbau- und Betriebsanleitung	I	Istruzioni di montaggio, uso e manutenzione
GB	Installation and Operating Instructions	H	Beépítési és üzemeltetési utasítás
F	Notice de montage et de mise en service	PL	Instrukcja montażu i obsługi
NL	Montage- en bedieningsvoorschriften	CZ	Návod k montáži a obsluze
E	Instrucciones de instalación y servicio	RUS	Инструкция по монтажу и эксплуатации

2021982-Ed.02/2007-05-DDD

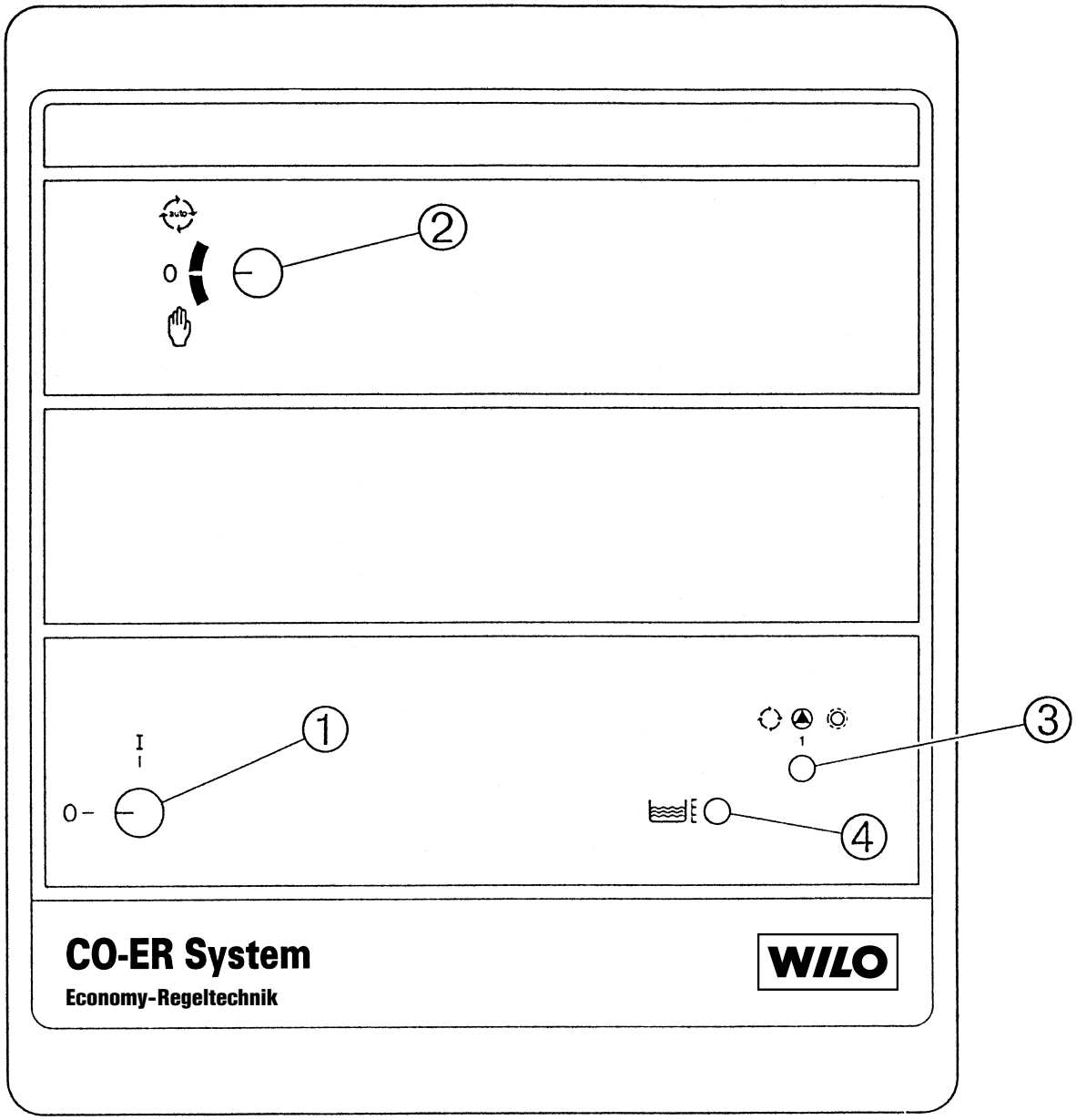

Fig. 1

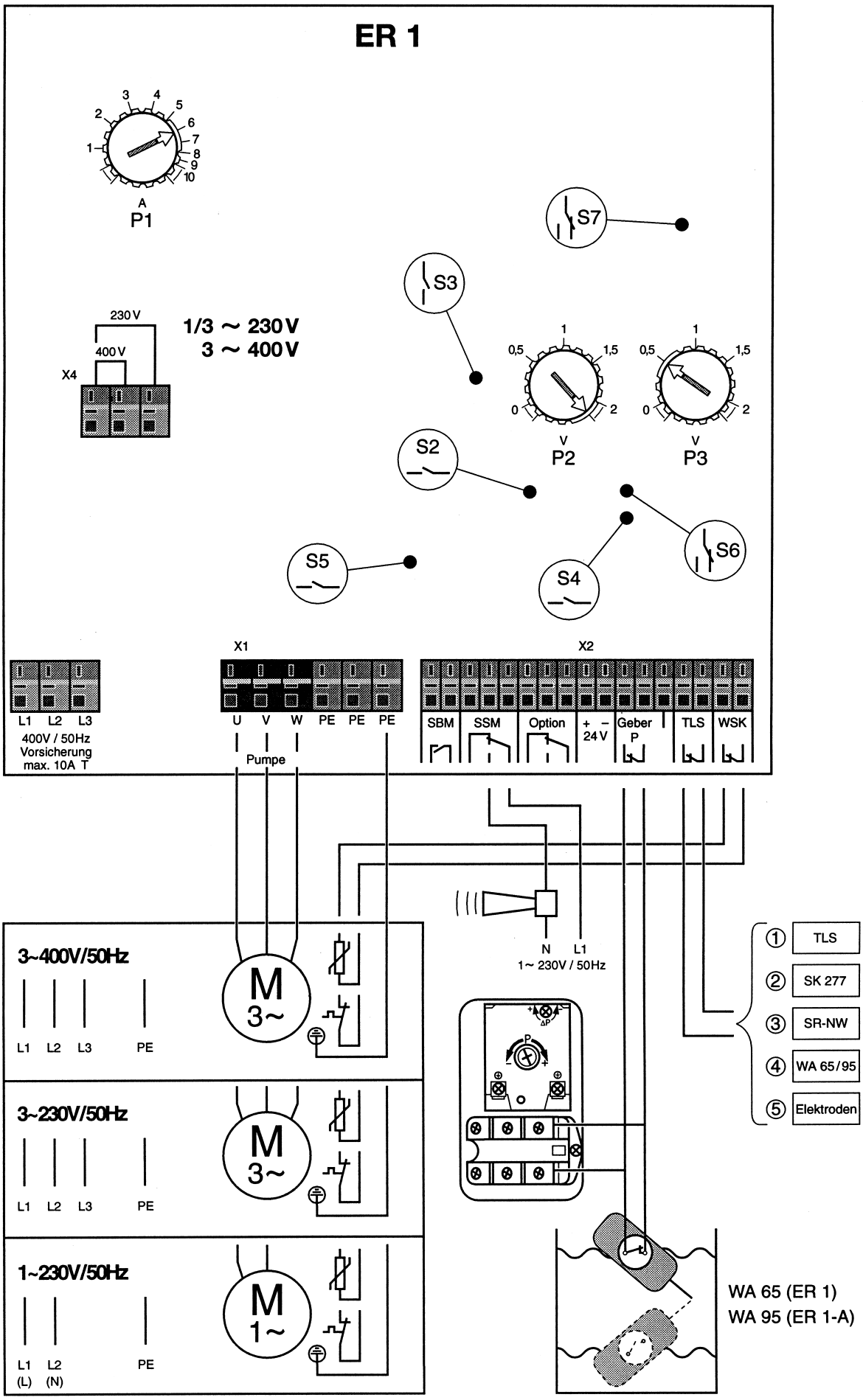
ER 1
A
P1
S7
S3
230 V
400 V
X4
1/3 ~ 230 V
3 ~ 400 V
V
P2
V
P3
S2
S5
S4
S6
X1
X2
L1 L2 L3
400V / 50Hz
Vorsicherung
max. 10A T
U V W PE PE PE
Pumpe
SBM
SSM
Option
+ –
24 V
Geber
P
TLS
WSK
N L1
1~ 230V / 50Hz
① TLS
② SK 277
③ SR-NW
④ WA 65/95
⑤ Elektroden
3~400V/50Hz
L1 L2 L3 PE
M
3~
3~230V/50Hz
L1 L2 L3 PE
M
3~
1~230V/50Hz
L1 L2
(L) (N)
PE
M
1~
WA 65 (ER 1)
WA 95 (ER 1-A)

Fig. 2

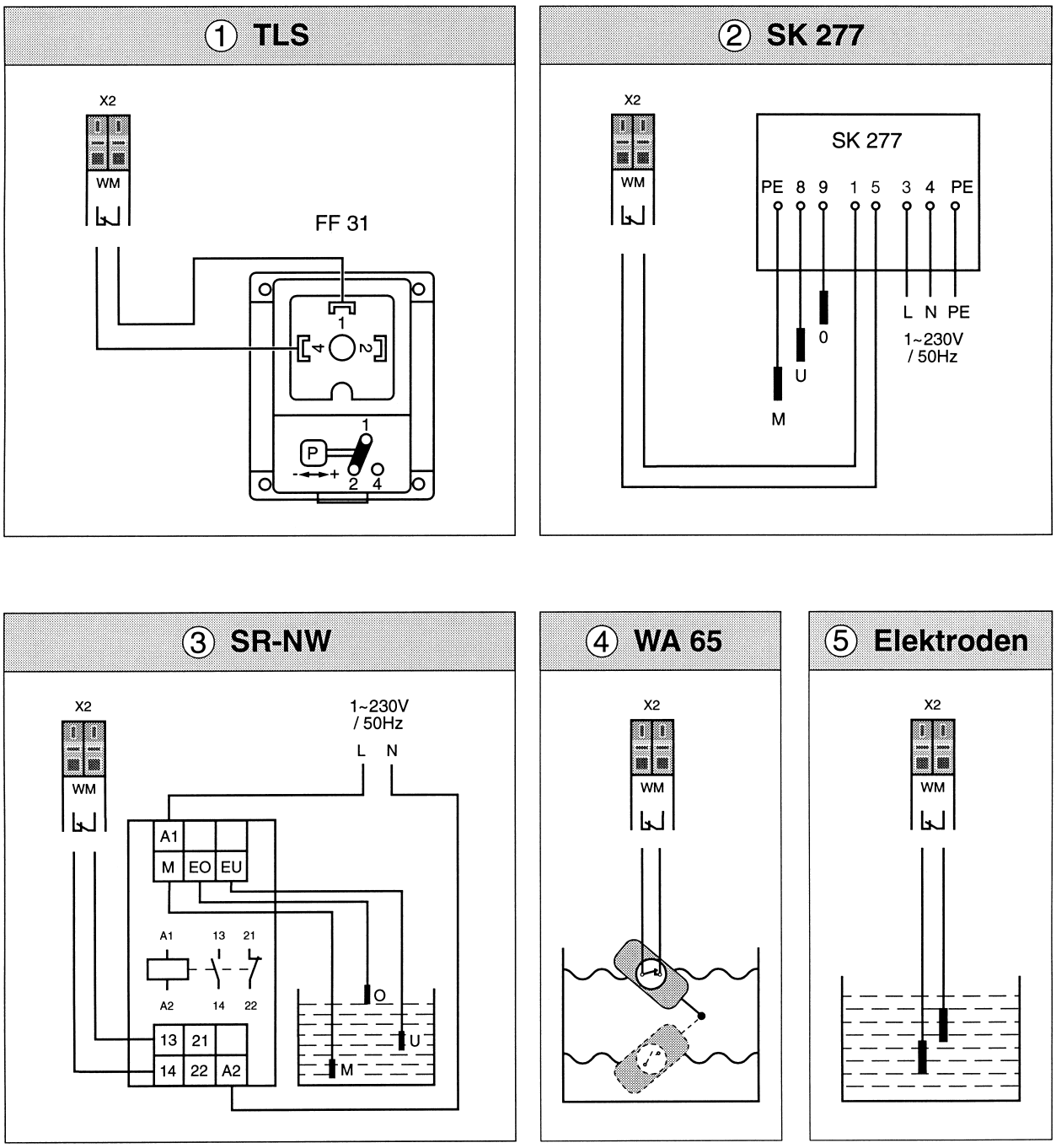
① TLS
X2
WM
FF 31
1
4
2
P
1
2 4
② SK 277
X2
WM
SK 277
PE 8 9 1 5 3 4 PE
L N PE
1~230V
/ 50Hz
0
U
M
③ SR-NW
X2
WM
1~230V
/ 50Hz
L N
A1
M EO EU
A1 13 21
A2 14 22
13 21
14 22 A2
O
U
M
④ WA 65
X2
WM
⑤ Elektroden
X2
WM

Fig. 3

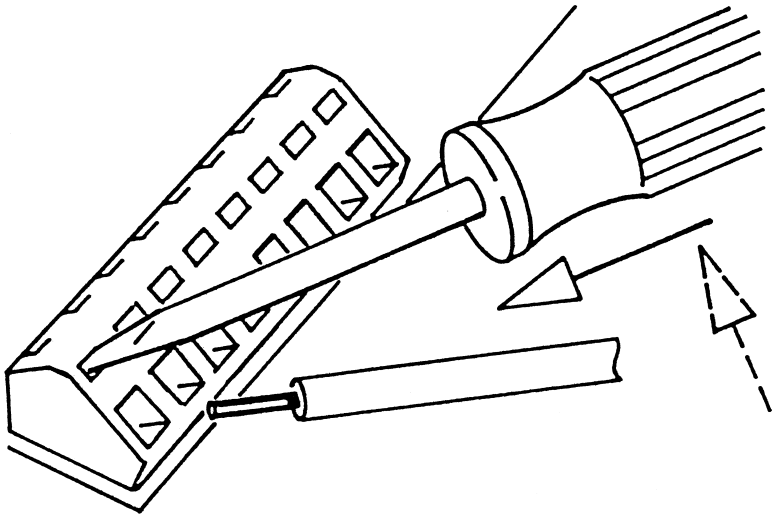

Fig. 4

D

1. Allgemeines 4
2. Sicherheit 4
3. Transport und Zwischenlagerung 4
4. Beschreibung von Erzeugnis und Zubehör 4
5. Aufstellung / Einbau 4
6. Inbetriebnahme 5
7. Wartung 5
8. Störungen, Ursachen und Beseitigung 5

E

1. Generalidades 13
2. Seguridad 13
3. Transporte y almacenaje 13
4. Descripción del producto y de los accesorios 13
5. Instalación / montaje 13
6. Puesta en marcha 14
7. Mantenimiento 14
8. Fallos: causas y soluciones 14

GB

1. General 6
2. Safety Notes 6
3. Transport and Storage 6
4. Description of the Product and Accessories 6
5. Siting / Installation 6
6. Commissioning 7
7. Maintenance 7
8. Faults, Causes and Remedies 7

I

1. Generalità 15
2. Sicurezza 15
3. Trasporto e magazzinaggio 15
4. Descrizione prodotto e accessori 15
5. Montaggio / Installazione 15
6. Messa in esercizio 16
7. Manutenzione 16
8. Blocchi, cause e rimedi 16

F

1. Généralités 8
2. Sécurité 8
3. Transport et stockage avant utilisation 8
4. Description du produit et des accessoires 8
5. Installation / Montage 8
6. Mise en service 9
7. Entretien 9
8. Pannes, causes et remèdes 9

H

1. Általános rész 17
2. Biztonság 17
3. Szállítás és közbenső raktározás 17
4. A termék és tartozékai leírása 17
5. Felállítás / beépítés 17
6. Üzembehelyezés 18
7. Karbantartás 18
8. Üzemzavarok, oka és elhárítása 18

NL

1. Algemeen 11
2. Veiligheid 11
3. Transport en tussenopslag 11
4. Omschrijving van het produkt 11
5. Opstelling / inbouw 11
6. Inbedrijfname 12
7. Onderhoud 12
8. Storingen, oorzaken en oplossingen 12

PL

1. Dane ogólne 19
2. Bezpieczeństwo 19
3. Transport i magazynowanie 19
4. Opis wyrobu i wyposażenie dodatkowego 19
5. Ustawienie / Montaż 19
6. Uruchomienie 20
7. Obsługa 20
8. Awarie, przyczyny i usuwanie 20

CZ

1. Všeobecné informace 21
2. Bezpečnost 21
3. Přeprava a skladování 21
4. Popis výrobku a příslušenství 21
5. Umístění / instalace 21
6. Uvadění do provozu 22
7. Údržba 22
8. Poruchy, jejich příčiny a odstraňování 22

RUS

1. Общие положения 23
2. Меры безпасности 23
3. Транспортировка и хранение 23
4. Описание изделия и принадлежностей 23
5. Установка / монтаж 23
6. Ввод в эксплуатацию 24
7. Обслуживание 24
8. Неиспраности, причины и способы устранения 24

D **CE-Konformitätserklärung**

Hiermit erklären wir, daß dieses Aggregat folgenden einschlägigen Bestimmungen entspricht:

Elektromagnetische Verträglichkeit
89/336/EWG i.d.F.
92/31/EWG, 93/68/EWG

Angewendete harmonisierte Normen, insbesondere
EN 50 081-1, EN 50 082-1

GB **EC declaration of conformity**

We hereby declare that this unit complies with the following relevant provisions:

Resistance to electromagnetism
89/336/EWG in this version
92/31/EWG, 93/68/EWG

Applied harmonized standards in particular:
EN 50 081-1, EN 50 082-1

F **Déclaration de conformité CE**

Par la présente, nous déclarons que cet agrégat sitisfait aux dispositions suivantes:

Compatibilité électromagnétique
89/336/CEE, 92/31/CEE, 93/68/CEE

Normes utilisées harmonisées, notamment
EN 50 081-1, EN 50 082-1

NL **EG-verklaring van overeenstemming**

iermede verklaren wij dat deze machine voldoet aan de volgende bepalingen:

Elektromagnetische tolerantie
89/336/EEG, 92/31/EEG, 93/68/EEG

Gebruikte geharmoniseerde normen, in het bijzonder
EN 50 081-1, EN 50 082-1

E **Declaración de conformidad CE**

Por la presente declaramos que esta unidad satisface las disposiciones pertinentes siguientes:

Compatibilidad electromagnética
89/336/CEE, 92/31/CEE, 93/68/CEE

Normas armonizadas utilizadas particularmente
EN 50 081-1, EN 50 082-1

I **Dichiarazione di conformità CE**

Con la presente si dichiara che le presenti pompe sono conformi alle seguenti direttive di armonizzazione

Compatibilità elettromagnetica
89/336/CEE, 92/31/CEE, 93/68/CEE

Norme armonizzate applicate, in particolare
EN 50 081-1, EN 50 082-1

SF **CE-standardinmukaisuusseloste**

Ilmoitamme täten, että tämä laite vastaa seuraavia asiaankuuluvia määräyksiä:

Sähkömagneettinen soveltuvuus
89/336/ETY, 92/31/ETY, 93/68/ETY

Käytetyt yhteensovitetut standardit, erityisesti
EN 50 081-1, EN 50 082-1

S **EEC konformitetsdeklaration**

Härmed förklaras att denna maskin uppfyller följande bestämmelser:

Elektromagnetisk kompatibilitet
89/336/EEC i denna version,
92/31/EEC, 93/68/EEC

Tillämpade harmoniserade normer, särskilt:
EN 50 081-1, EN 50 082-1

H **EK. azonossági nyilatkozat**

Ezennel kijelentjük, hogy az agregát a megkívánt alanti feltételeknek megfelel:

Elektromagnetikus Összeegyeztethetőség 89/336/EWG, 92/31/EWG, 93/68/EWG

Alkalmazott, harmonizált normák, különösen az
EN 50 081-1, EN 50 082-1

GR **Δήλωση συμμόρφωσης με τους κανονισμούς CE**

Δηλώνουμε ότι το προϊόν αυτό ικανοποιεί τις ακόλουθες διατάξεις:

Ηλεκτρομαγνητική συμβατότητα
89/336/CEE, 92/31/CEE, 93/68/CEE

Εναρμονισμένα χρησιμοποιούμενα πρότυπα, ιδιαίτερα
EN 50 081-1, EN 50 082-1

CZ **Osvědčení o shodnosti s normami EU**

Prohlašujeme tímto, že toto zařízení odpovídá následujícím příslušným ustanovením:

Elektromagneticá snášenlivost 89/336/EHS včetně dodatků, 92/31/EHS, 93/68/EHS

Použité souhlasné normy, zejména:
EN 50 081-1, EN 50 082-1

PL **Oświadczenie zgodności EC**

Niniejszym oświadczamy, że pompa odpowiada następującym właściwym dla niej dyrektywom:
Odporność elektromagnetyczna EC 89/336/EEC w tej wersji, 92/31/EEC, 93/68/EEC

Zastosowano normy zharmonizowane, w szczególności:
EN 50 081-1, EN 50 082-1

RUS **Заявление о соответствии нормам, действующим в Европейском Сообществе**

Настоящим документом заявляем, что данная установка соответствует следующим постановлениям:
Электромагнитная совместимость
89/336/ЦЕЕ, 92/31/ЦЕЕ, 93/68/ЦЕЕ
Использовавшиеся гармонизированные стандарты и нормы, в частности
EN 50 081-1, EN 50 082-1

DK **EF-overensstemmelseserklæring**

Det erklæres hermed, at dette udstyr er i overensstemmelse med følgende bestemmelser:

Elektromagnetisk kompatibilitet:
89/336/EØF i denne udgave, 92/31/EØF, 93/68/EØF

Anvendte harmoniserede normer, især:
EN 50 081-1, EN 50 082-1

N **EU-overensstemmelseserklæring**

Det erklæres herved at dette utstyret stemmer overens med følgende bestemmelser:

Elektromagnetisk kompatibilitet
89/336/EEC og følgende, 92/31/EEC, 93/68/EEC

Anvendte harmoniserte normer, i særdeleshet
EN 50 081-1, EN 50 082-1

TR **Uygunluk Belgesi**

Aşağıdaki cihazların takibi standartlara vygun olduğunu temin ederiz:

Elektromanyetik Uyumluluk 89/336/EWG i.d.F., 92/31/EWG, 93/68/EWG

Özellikle kullanılan Normlar
EN 50 081-1, EN 50 082-1

i. V.

Quality Management

WILO

WILO AG
Nortkirchenstraße 100
44263 Dortmund · Germany

2011681.2

1 General

Installation and commissioning by qualified personnel only!

1.1 Fields of application

Switch unit for the automatic control of lower capacity single pump units
– for water supply plants
– for fire fighting services
– for submersible pumps

1.2 Product data

1.2.1 Technical data

Power supply requirements:	1~230 V ± 10 %, 50/60 Hz, 3~230 V ± 10 %, 50/60 Hz, 3~400 V ± 10 %, 50/60 Hz,
Max. switch rating:	P2 ≤ 4 kW (max. current 10 A)
Degree of protection:	IP 41
Supply side fuses:	16 A, AC 3
Ambient temperature:	0 – 40°C

2 Safety Notes

Safety reference and regulations as laid down in the Installation and Operating Instructions of the pump to be connected must be referred to and strictly complied with.

3 Transport and Storage

ATTENTION! The unit must be protected from moisture and mechanical damage due to impact or shock. Electronic components must not be subjected to temperatures outside the limits from 10°C to 50°C.

4 Description of the Product and Accessories

4.1 Unit front panel (Fig.1)

The CO-ER (1) switch unit serves to automatically control the pump capacity. The unit front panel contains the following switches or signals respectively:
– 3-pole Main switch (Item 1) (L1, L2, L3)
  0 → OFF
  I → ON
– Selector switch (Item 2)
  Automatic → Automatic operation with all safety functions, electronic motor overload protection, low-water cut-out or overflow alarm respectively
  0 → OFF
  ✋ →Manual operation; pump switch-on independent of current system pressure and without safety functions. WSK (thermal winding contacts) function remains activated. This switch setting is intended for test operation only; manual operation runs for approx. 2 minutes and will then automatically switch-off.
– RUN-light (Item 3): Continual green light indicates proper pump operation, blinking green light indicates a motor fault.
– FAULT-light (Item 4): Red light to indicate a fault in the water circulating system.

4.2 Unit functions (Fig.2)

– Integrated electronic overload protection: To safeguard against motor overloading it is necessary to set the overload cut-out at the potentiometer P1 to the FLC-value of the pump/motor. Terminals WSK must then be bridged.
– External overload protection WSK/PTC: If the motor is equipped with integrated thermal windings contacts (WSK) or with PTC-sensor the potentiometer P1 must be set to its maximum value (righthand limit).
– Time-delayed switch-off: The automatic switch-off on sensor command can be time-delayed. The time-delay is set by means of potentiometer P2 between 0 and 2 minutes.
– TLS (dry-run protection): Pumps used in conjunction with water supply or fire services systems must not be allowed to run dry. A float switch (WA 65/95) or immersion probes are to be fitted to the mains water break tank to switch off the pump if the water level drops below minimum switch setting.
– Overflow alarm: The unit electronics for dry-run protection can also be utilized for overflow alarm in conjunction with submersible pumps. This requires switch action reversal by resetting the hook switch (see Chart 2). On closing of the float contacts the red fault light will be on, SSM (collective fault signal) will act as an alarm. The pump however will continue to run. Reset is automatic on ceasing of overflow.
– TLS time delay: Pump switch off action by the low-water cut-out as well as restart after resetting the fault signal can be time-delayed. The delay time can be set at potentiometer P3 between 2 seconds and 2 minutes.
– Test run: When set to “Test run” the pump will start automatically after each 10 hours standstill to run for 10 seconds. This is e.g. important in the case of fire fighting services to ensure the functions readiness of the pump. Test run can be eliminated by closing the hook switch S 3.

4.3 Scope of supply

Control unit ER 1 (-A)
(ER 1-A: 2 float switches and a klaxon)
O. & M. Manual

5 Siting/Installation

5.1 Installation

The control unit is wall-mounted with wall plugs and 4 mm fixing screws. The intermediate frame serves as a template to mark-off plug holes.

5.2 Electrical wiring (Fig. 2)

All electrical site works to be carried out by qualified and locally licenced tradesman in strict accordance with locally ruling regulations.

– Power supply and voltage must correspond to the name plate specification of the pump/motor to be connected.
– Locally ruling earthing regulation must be strictly complied with.
– Power cable for three-phase supply: 4 x 1.5 mm^2, for single phase: 3 x 1.5 mm^2.
– Note regarding the screwless terminals: Fig. 4 depicts how to open the terminals with the aid of a screwdriver. Any one terminal can only be connected to one lead respectively.
– Wiring connections to the terminal strip is as follows:
  (L), (N), PE:
  Mains power connection 1~230 V,
  Terminals at X4 to be bridged according to reference “230 V” on the board.
  L1, L2, L3, PE:
  Mains power connection 3~400 V,
  Terminals at X4 to be bridged according to reference “400 V” on the board.
  (Factory settings)
  L1, L2, L3, PE:
  Mains power connection 3~230 V,
  Terminals at X4 to be bridged according to reference “230 V” on the board.
  U, V, PE:
  Terminals for single phase wiring to pump/motor.
  U, V, W, PE:
  Terminals for three phase wiring to pump/motor.
  SBM:
  Terminals for remote collective Run signal, volt-free NC (normally-open) contacts, max. switch rating 250 V – 1 A. Contacts are closed with motor running.
  SSM:
  Terminals for remote collective Fault signal, volt-free SPDT (single pole, double throw) contacts, max. switch rating 250 V – 1 A, e.g. for wiring to a klaxon.
  Option / 24 V:
  Terminals for future function extensions, e.g. for the control of a remotely located Y-Δ starter for motors of larger power rating. Volt-

free SPDT (single pole, double throw) contacts, max. switch rating 250 V – 1 A, DC power output 24 V.
Sensor P:
Terminals for wiring connections to pressure or float switch respectively for On/Off pump control.
TLS:
Terminals for wiring to low water cut-out or overflow alarm respectively. The differing possibilities of dry-run protection and their respective wiring are depicted in Fig. 3.
WSK:
Terminals for wiring to motor integrated overload protection devices WSK (thermal winding contacts) or PTC-sensors. Hook switches and potentiometers located on the unit board must be set for the different unit functions. These are described in Chart 1.

6 Commissioning

All functional adjustments on the ER1(-A) control unit as laid out in Chart II must have been set prior to initially starting-up of the connected pump plant.

7 Maintenance

The control unit is maintenance-free.

8 Faults - Causes and Remedies

Blinking green light:
Motor overload cut-out has responded.
No automatic reset after rectification of fault cause.
To reset: Switch selector switch to “0”
Red light On:
Switch-off due to low-water or overflow respectively.
Automatic reset after rectification of fault cause.
Reset is also possible by switching the selector switch to “0”.
SSM:
On each fault event and overflow alarm.

If the fault cannot be remedied please contact your Installer or your nearest WILO service.

Chart 1: Functions of hook switches and potentiometer (Fig. 2)

Switch/Pot.	Functions
S 2	Effect reversal for sensor input: S 2 open: Pump runs on closed sensor contacts S 2 closed: Pump runs on open sensor contacts
S 3	Test run: S 3 open: Test run activated S 3 closed: Test run deactivated
S 4	Effect reversal for TLS input: S 4 open: Pump stops on low water (pressure boosting) S 4 closed: Pump starts on overflow (submersible pump)
S 5	Switch is not active with standard design
S 6	Effect reversal for the TLS input S 6 top closed: Pump stops on low water S 6 bottom closed: Pump starts on overflow
S 7	Switch for function extension Output option
P 1	Setting to suit motor full load current
P 2	Time delay after pump stop command (0 - 2 min)
P 3	Time delay for stop on low water / start on overflow

Chart 2: Settings of hook switches and potentiometers for different applications

Switch/Pot.	Pressure boosting	Fire services	Waste disposal**
S 2	0*	1*	0
S 3	0	0	1
S 4	0	0	1
S 6	top	top	bottom
P1 (R 10)	see motor name plate		
P2 (R 27)	2	2	0
P3 (R 48)	0.5	0.5	0

* 0 → Hook switch open, 1 → Hook switch closed
** Factory settings

Technical modifications reserved!

WILO AG
Nortkirchenstraße 100
44263 Dortmund
Germany
T +49 231 4102-0
F +49 231 4102-7363
www.wilo.com

Wilo – International (Subsidiaries)

Austria
WILO Handelsges. m.b.H.
1230 Wien
T +43 5 07507-0
F +43 5 07507-42
office@wilo.at

Azerbaijan
WILO Caspian LLC
1014 Baku
T +994 12 4992386
F +994 12 4992879
info@wilo.az

Belarus
WILO Bel OOO
220035 Minsk
T +375 17 2503393
F +375 17 2503383
wilobel@wilo.by

Belgium
WILO SA/NV
1083 Ganshoren
T +32 2 4823333
F +32 2 4823330
info@wilo.be

Bulgaria
WILO Bulgaria Ltd.
1125 Sofia
T +359 2 9701970
F +359 2 9701979
info@wilo.bg

Canada
WILO Canada Inc.
Calgary, Alberta T2A5L4
T/F +1 403 2769456
bill.lowe@wilo-na.com

China
WILO SALMSON (Beijing)
Pumps System Ltd.
101300 Beijing
T +86 10 80493900
F +86 10 80493788
wilobj@wilo.com.cn

Croatia
WILO Hrvatska d.o.o.
10090 Zagreb
T +38 51 3430914
F +38 51 3430930
wilo-hrvatska@wilo.hr

Czech Republic
WILO Praha s.r.o.
25101 Cestlice
T +420 234 098 711
F +420 234 098 710
info@wilo.cz

Denmark
WILO Danmark A/S
2690 Karlslunde
T +45 70 253312
F +45 70 253316
wilo@wilo.dk

Estonia
WILO Eesti OÜ
12618 Tallinn
T +372 6509780
F +372 6509781
info@wilo.ee

Finland
WILO Finland OY
02330 Espoo
T +358 207401540
F +358 207401549
wilo@wilo.fi

France
WILO S.A.S.
78310 Coignières
T +33 1 30050930
F +33 1 34614959
info@wilo.fr

Great Britain
WILO (U.K.) Ltd.
DE14 2WJ Burton-
Upon-Trent
T +44 1283 523000
F +44 1283 523099
sales@wilo.co.uk

Greece
WILO Hellas AG
14569 Anixi (Attika)
T +302 10 6248300
F +302 10 6248360
wilo.info@wilo.gr

Hungary
WILO Magyarország Kft
2045 Törökbálint
(Budapest)
T +36 23 889500
F +36 23 889599
wilo@wilo.hu

Ireland
WILO Engineering Ltd.
Limerick
T +353 61 227566
F +353 61 229017
sales@wilo.ie

Italy
WILO Italia s.r.l.
20068 Peschiera
Borromeo (Milano)
T +39 25538351
F +39 255303374
wilo.italia@wilo.it

Kazakhstan
WILO Central Asia
050002 Almaty
T +7 3272 785961
F +7 3272 785960
in.pak@wilo.kz

Korea
WILO Pumps Ltd.
621-807 Gimhae
Gyeongnarn
T +82 55 3405809
F +82 55 3405885
wilo@wilo.co.kr

Latvia
WILO Baltic SIA
1019 Riga
T +371 7 145229
F +371 7 145566
mail@wilo.lv

Lebanon
WILO SALMSON
Lebanon
12022030 El Metn
T +961 4 722280
F +961 4 722285
wsl@cyberia.net.lb

Lithuania
WILO Lietuva UAB
03202 Vilnius
T/F +370 2 236495
mail@wilo.lt

Montenegro
WILO Beograd d.o.o.
11000 Beograd
T +381 11 2850410
F +381 11 2851278
office@wilo.co.yu

The Netherlands
WILO Nederland b.v.
1948 RC Beverwijk
T +31 251 220844
F +31 251 225168
info@wilo.nl

Norway
WILO Norge AS
0901 Oslo
T +47 22 804570
F +47 22 804590
wilo@wilo.no

Poland
WILO Polska Sp. z.o.o.
05-090 Raszyn
T +48 22 7026161
F +48 22 7026100
wilo@wilo.pl

Portugal
Bombas Wilo-Salmson
Portugal Lda.
4050-040 Porto
T +351 22 2076900
F +351 22 2001469
bombas@wilo-salmson.pt

Romania
WILO Romania s.r.l.
041833 Bucharest
T +40 21 4600612
F +40 21 4600743
wilo@wilo.ro

Russia
WILO Rus ooo
123592 Moscow
T +7 495 7810690
F +7 495 7810691
wilo@orc.ru

Serbia
WILO Beograd d.o.o.
11000 Beograd
T +381 11 2850410
F +381 11 2851278
office@wilo.co.yu

Slovakia
WILO Slovakia s.r.o.
82008 Bratislava 28
T +421 2 45520122
F +421 2 45246471
wilo@wilo.sk

Slovenia
WILO Adriatic d.o.o.
1000 Ljubljana
T +386 1 5838130
F +386 1 5838138
wilo.adriatic@wilo.si

Spain
WILO Ibérica S.A.
28806 Alcalá de Henares
(Madrid)
T +34 91 8797100
F +34 91 8797101
wilo.iberica@wilo.es

Sweden
WILO Sverige AB
35246 Växjö
T +46 470 727600
F +46 470 727644
wilo@wilo.se

Switzerland
EMB Pumpen AG
4310 Rheinfelden
T +41 61 8368020
F +41 61 8368021
info@emb-pumpen.ch

Turkey
WILO Pompa Sistemleri
San. ve Tic. A.Ş.
34857 Istanbul
T +90 216 6610203
F +90 216 6610212
wilo@wilo.com.tr

Ukraina
WILO Ukraina t.o.w.
01033 Kiew
T +38 044 2011870
F +38 044 2011877
wilo@wilo.ua

USA
WILO-EMU LLC
Thomasville, Georgia
31758-7810
T +1 229 584 0098
F +1 229 584 0234
terry.rouse@wilo-emu.com

USA
WILO USA LLC
Calgary, Alberta T2A5L4
T/F +1 403 2769456
bill.lowe@wilo-na.com

Wilo – International (Representation offices)

Bosnia and Herzegovina
71000 Sarajevo
T +387 33 714510
F +387 33 714511
zeljko.cvjetkovic@wilo.ba

Georgia
0177 Tbilisi
T/F +995 32317813
info@wilo.ge

Macedonia
1000 Skopje
T/F +389 2122058
valerij.vojneski@wilo.com.mk

Moldova
2012 Chisinau
T/F +373 2 223501
sergiu.zagurean@wilo.md

Tajikistan
Dushanbe
T +992 93 5554541

Uzbekistan
100046 Taschkent
T/F +998 71 1206774
info@wilo.uz

January 2007

WILO AG
Nortkirchenstraße 100
44263 Dortmund
Germany
T 0231 4102-0
F 0231 4102-7363
wilo@wilo.de
www.wilo.de

Wilo-Vertriebsbüros in Deutschland

G1 Nord
WILO AG
Vertriebsbüro Hamburg
Beim Strohhause 27
20097 Hamburg
T 040 5559490
F 040 55594949
hamburg.anfragen@wilo.de

G2 Ost
WILO AG
Vertriebsbüro Berlin
Juliusstraße 52–53
12051 Berlin-Neukölln
T 030 6289370
F 030 62893770
berlin.anfragen@wilo.de

G3 Sachsen/Thüringen
WILO AG
Vertriebsbüro Dresden
Frankenring 8
01723 Kesselsdorf
T 035204 7050
F 035204 70570
dresden.anfragen@wilo.de

G4 Südost
WILO AG
Vertriebsbüro München
Landshuter Straße 20
85716 Unterschleißheim
T 089 4200090
F 089 42000944
muenchen.anfragen@wilo.de

G5 Südwest
WILO AG
Vertriebsbüro Stuttgart
Hertichstraße 10
71229 Leonberg
T 07152 94710
F 07152 947141
stuttgart.anfragen@wilo.de

G6 Rhein-Main
WILO AG
Vertriebsbüro Frankfurt
An den drei Hasen 31
61440 Oberursel/Ts.
T 06171 70460
F 06171 704665
frankfurt.anfragen@wilo.de

G7 West
WILO AG
Vertriebsbüro Düsseldorf
Westring 19
40721 Hilden
T 02103 90920
F 02103 909215
duesseldorf.anfragen@wilo.de

Kompetenz-Team Gebäudetechnik

WILO AG
Nortkirchenstraße 100
44263 Dortmund
T 0231 4102-7516
T 01805 R•U•F•W•I•L•O*
7•8•3•9•4•5•6
F 0231 4102-7666

Erreichbar Mo–Fr von 7–18 Uhr.

- Antworten auf
  - Produkt- und Anwendungsfragen
  - Liefertermine und Lieferzeiten
- Informationen über Ansprechpartner vor Ort
- Versand von Informationsunterlagen

Kompetenz-Team Kommune Bau + Bergbau

WILO EMU GmbH
Heimgartenstraße 1
95030 Hof
T 09281 974-550
F 09281 974-551

Werkskundendienst Gebäudetechnik Kommune Bau + Bergbau Industrie

WILO AG
Nortkirchenstraße 100
44263 Dortmund
T 0231 4102-7900
T 01805 W•I•L•O•K•D*
9•4•5•6•5•3
F 0231 4102-7126

Erreichbar Mo–Fr von 7–17 Uhr.
Wochenende und feiertags 9–14 Uhr elektronische Bereitschaft mit Rückruf-Garantie!

- Kundendienst-Anforderung
- Werksreparaturen
- Ersatzteilfragen
- Inbetriebnahme
- Inspektion
- Technische Service-Beratung
- Qualitätsanalyse

Wilo-International

Österreich
Zentrale Wien:
WILO Handelsgesellschaft mbH
Eitnergasse 13
1230 Wien
T +43 5 07507-0
F +43 5 07507-15

Vertriebsbüro Salzburg:
Gnigler Straße 56
5020 Salzburg
T +43 5 07507-0
F +43 5 07507-15

Vertriebsbüro Oberösterreich:
Trattnachtalstraße 7
4710 Grieskirchen
T +43 5 07507-0
F +43 5 07507-15

Schweiz
EMB Pumpen AG
Gerstenweg 7
4310 Rheinfelden
T +41 61 8368020
F +41 61 8368021

Standorte weiterer Tochtergesellschaften

Aserbaidschan, Belarus, Belgien, Bulgarien, China, Dänemark, Estland, Finnland, Frankreich, Griechenland, Großbritannien, Irland, Italien, Kanada, Kasachstan, Korea, Kroatien, Lettland, Libanon, Litauen, Montenegro, Niederlande, Norwegen, Polen, Portugal, Rumänien, Russland, Schweden, Serbien, Slowakei, Slowenien, Spanien, Tschechien, Türkei, Ukraine, Ungarn, USA

Die Adressen finden Sie unter **www.wilo.de** oder **www.wilo.com**.

Stand Februar 2007

* 14 Cent pro Minute aus dem deutschen Festnetz der T-Com