Submittal Data Sheet

Wilo Helix – Vertical Multistage Pumps

Wilo Helix V 50 (304 SS – EPDM)

Project:	
Engineer:	
Contractor:	
Submitted By:	Date:
Approved By:	Date:

Tag #	Model #	Flow	Head	HP	Cycle	Phase	Voltage	RPM
					60HZ			

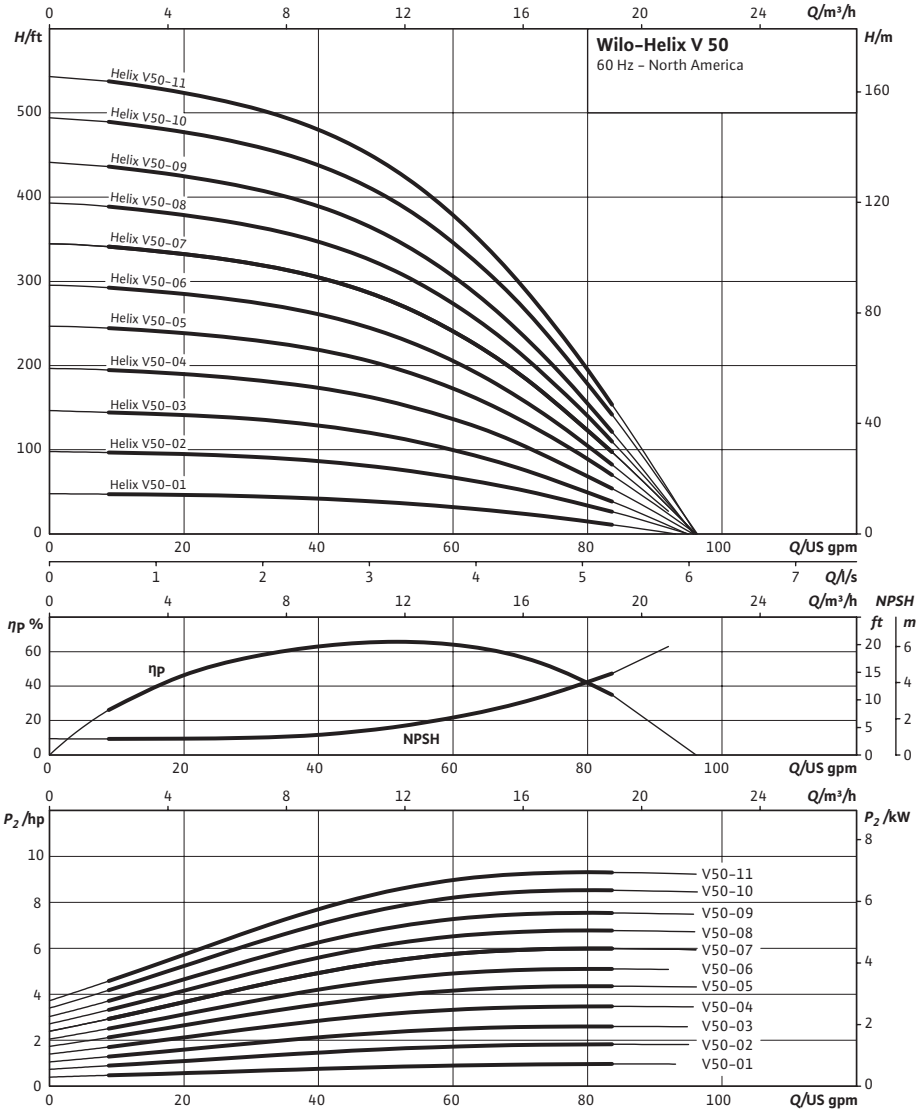

Applications

- Water supply & pressure boosting
- Industrial circulation systems
- Cooling water circulation systems
- Process water
- Washing systems
- Irrigation

Materials of Construction

Pump volute, flanges, impeller, stage housing, diffusers	Stainless steel AISI 304
Shaft	Stainless steel AISI 304 or AISI 318LN (Depending on version)
Shaft sleeve	Stainless Steel AISI 316L
Baseplate & lantern	Cast Iron Cataphoresis Coated ASTM A 48 Class 35/40
O-ring	EPDM (FKM upon request)
Jacket pipe	Stainless Steel AISI 304

Technical Data

Certification	NSF 61 Approved (EPDM)
Liquid Temp Range	-4°F to +248°F
Power Supply	3~ 208-230v, 3~ 460v, 3~ 575v
Ambient temperature	+5°F to +104°F
Flange Connection	ANSI CLASS 300
Max Operating Pressure	232/363 PSI
Protection Class	IP 55

Approval Stamp

Submittal Data Sheet

Wilo Helix – Vertical Multistage Pumps

Dimensions, Weights & Electrical Data

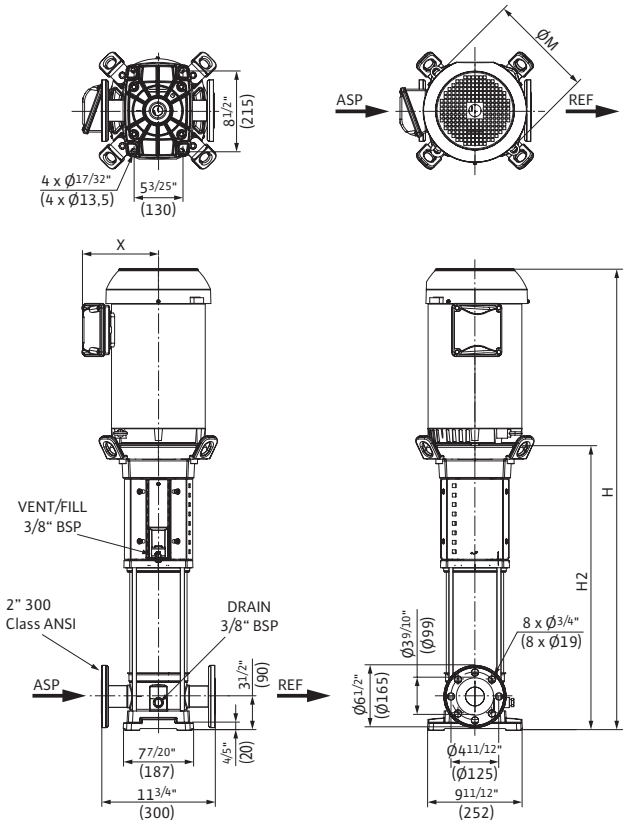

Email Print Save

Dimensions and Weights

	H		H_2		Ø M		X			
	Dimensions-inches (mm)								Weight	
Model	**in**	**mm**	**in**	**(mm)**	**in**	**(mm)**	**in**	**(mm)**	**lbs**	**kg**
Helix V 50-1	$26^{1}/_{16}$	662	17	432	$6^{11}/_{16}$	170	9	229	72	32.66
Helix V 50-2	$28^{13}/_{16}$	732	17	432	$7^{5}/_{8}$	194	10	254	93	42.18
Helix V 50-3	31½	800	19	483	$7^{3}/_{8}$	187	10	254	101	45.81
Helix V 50-4	$37^{5}/_{8}$	956	21	533	$9^{7}/_{16}$	240	11	279	133	60.33
Helix V 50-5	$39^{1}/_{8}$	994	22	559	$9^{7}/_{16}$	240	11	279	142	64.41
Helix V 50-6	$40^{9}/_{16}$	1030	24	610	$9^{7}/_{16}$	240	11	279	144	65.32
Helix V 50-7	$48^{11}/_{16}$	1237	30	762	$10^{15}/_{16}$	278	13	330	199	90.26
Helix V 50-8	$50^{3}/_{16}$	1275	31	787	$10^{15}/_{16}$	278	13	330	223	101.15
Helix V 50-9	$51^{5}/_{8}$	1311	33	838	$10^{15}/_{16}$	278	13	330	226	102.51
Helix V 50-10	$53^{1}/_{8}$	1349	34	864	$10^{15}/_{16}$	278	13	330	226	102.51
Helix V 50-11	$57^{11}/_{16}$	1465	37	940	$10^{15}/_{16}$	278	13	330	258	117.03

TEFC Motor Data

		208-230/460 V	**575 V**
P2	Phase	FLA	FLA
[HP]	**[~]**	**[A]**	**[A]**
1	3	3.32-3/1.5	1.2
2	3	5.46-4.94/2.47	1.98
3	3	7.76-7.02/3.51	2.81
5	3	13.1-11.8/5.9	4.72
5	3	13.1-11.8/5.9	4.72
5	3	13.1-11.8/5.9	4.72
7.5	3	19.2-17.3/8.67	6.94
7.5	3	19.2-17.3/8.67	6.94
7.5	3	19.2-17.3/8.67	6.94
7.5	3	19.2-17.3/8.67	6.94
10	3	25.4-23/11.5	9.2